20Mbps fiber optic cable with gigabit router

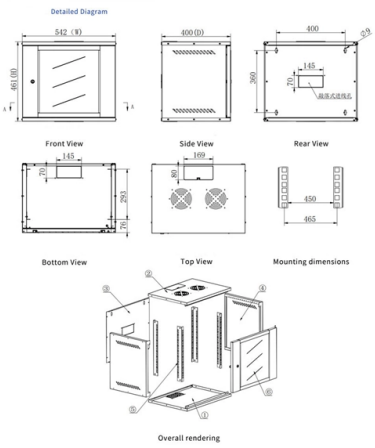

Overview

However, setting up a fiber optic connection to your router can seem daunting if you''re unfamiliar with the process.

Key Takeaways

For a 20Mbps fiber connection, any modern gigabit-capable fiber router with Wi-Fi 6 or higher will easily handle your speed while providing future-proof performance.

Key Considerations for Fiber Routers

Speed and Standards: Even though your plan is 20Mbps, choosing a router with gigabit Ethernet ports and Wi-Fi 6 (802. 11ax) or Wi-Fi 7 ensures stable performance, low latency, and compatibility with future upgrades.

Wi-

Fi 6 is sufficient for most households, offering better performance in dense networks, while Wi-Fi 7 is ideal if you plan to upgrade to multi-gigabit fiber later. Wired Connectivity: Look for routers with at least four gigabit LAN ports. Some high-end models include 2.

5G or 10G ports for NAS or gaming setups, which is overkill for 20Mbps but ensures future-proofing. Using CAT6 or CAT7 cables maximizes wired speeds. Compatibility: Ensure the router is compatible with your ISP's ONT (Optical Network Terminator).

© 2026 CGWEB NETWORK INFRASTRUCTURE - All rights reserved

Some IS

Ps require an SFP port or an external modem, so check your provider's setup before purchasing. Additional Features: Features like QoS (Quality of Service) help prioritize video calls or gaming, mesh support improves coverage in larger homes, and dual-band or tri-band Wi-Fi ensures multiple devices can connect without interference.

Recommended Models

Netgear Nighthawk RS700: Wi-Fi 7, quad-core 2. 6 GHz CPU, 10G WAN/LAN, four 1G LAN ports, coverage up to 3,500 sq. ft., supports multiple devices simultaneously.

ASU

S RT-BE86U: Wi-Fi 7, quad-core 2. 6 GHz processor, 10G WAN/LAN, dual 2. 5G ports, excellent for streaming, gaming, and smart home devices.

FRITZ! Box 5690: Wi-Fi 6, dual-band, multiple LAN ports, integrated media server, reliable for home networks with fiber connections.

Practical Advice

For a 20Mbps fiber plan, even a mid-range Wi-Fi 6 router with gigabit ports is more than sufficient. The extra capacity ensures smooth performance for multiple devices, streaming, and gaming, and prepares your network for future speed upgrades. Wired connections are recommended for devices requiring stable throughput, while Wi-Fi handles mobile devices and general household use efficiently.

Article Content

How to Connect Fiber Optic Cable to Router: A Step-by

However, setting up a fiber optic connection to your router can seem daunting if you''re unfamiliar with the process. In this guide, we''ll walk you

Expert''s Choice: 10 The Best Router For Optical Fibre

Are you in search of the perfect router for your optical fiber

How to Connect Fiber Optic Cable to Router: Complete

By following this detailed guide, you''ve not only learned how to connect fiber optic cable to router properly but also how to optimize and maintain

Can I use my existing router with fiber?

While your current router might physically connect to the fiber network via an ONT and Ethernet cable, its capabilities will dictate whether you

© 2026 CGWEB NETWORK INFRASTRUCTURE - All rights reserved

How to Connect Fiber Optic Cable to Router: Top 5

Learn how to connect fiber optic cable to router with our step-by-step guide. Optimize your home network for speed and reliability!

What Is Fiber Optic Cable?

A fiber optic cable is a long-distance network telecommunications cable made from strands of glass fibers that uses pulses of light to transfer data.

Want a Fiber Internet Connection? Read This First

The speeds at which fiber-optic cables can relay data means you can get symmetrical download and upload speeds on any speed tier, even up to a 50

Fiber Internet Provider

Fiber internet is significantly faster than cable, particularly for upload speeds. Many cable plans offer upload speeds of up to 20Mbps on their plans, while Greenlight

The Verizon Fios Gigabit Connection

Verizon Fios Gigabit Connection offers up to 940 Mbps download and 880 Mbps upload over a fiber-optic line in select US markets. Anyone holding Verizon stock (NYSE: VZ, ISIN

Best Fiber Internet Providers in 2025: Speeds, Pricing & Coverage

Discover the best fiber internet providers in 2025. Compare speeds, prices, and availability to choose the top fiber plan for your needs.

100 Mbps Modem Buying Guide for B2B Buyers

Compare fiber ONTs, DOCSIS 3.0 cable modems, and budget Wi-Fi 6 routers—covering specs, wholesale pricing ($2.90–$100), MOQs, and supplier certifications for 100 Mbps hardware.

TDS Fiber | Best Fiber Optic Internet Provider Near Me

Unlike traditional copper wire connections, fiber-optic cables offer faster speeds, greater bandwidth, and are less susceptible to interference. Learn more about fiber-optic internet connections here.

Mbps To Gigabit | Verizon Business

Convert Mbps to gigabit effortlessly with Verizon Business. Upgrade your network speed with our scalable solutions and boost productivity.

Best Fiber Internet Providers Of 2026 – Forbes Home

© 2026 CGWEB NETWORK INFRASTRUCTURE - All rights reserved

To help identify the best choices for fiber internet providers, the Forbes Home editorial team analyzed 22 major internet providers across pricing, speeds, plan features, customer sentiment

What Is Fiber Internet (And How Is It Different)?

Fiber trunk cables form most of the backbone of the modern internet, and you''ll see the benefits of them even if you don''t have "fiber internet." This is because the Internet Exchange Points

Fiber vs Cable Internet 2025: Speed, Reliability & Cost

Is fiber optic better than cable in 2025?Fiber vs Cable,Compare speed, reliability, and costs ($0.35 vs $3.00/ft). Discover why fiber is the backbone for AI data

Fritz! Box 4690 Edition International, Wi-Fi 7 Mesh Router for

Multi-gigabit speed and all the FRITZ comfort! on any fiber optic modem The FRITZ!Box 4690 takes the speed in the local network to a whole new level, enabling data-intensive applications such as

Types of Ethernet Cable

Types of Ethernet Cables Mainly there are three types of ethernet cables used in LANs Coaxial Cables Twisted Pair Cables Fiber optic Cables 1. Coaxial Cables A coaxial cable is used to

Contact Us

Continue your research online:

Website: https://cgweb.co.za
Technical inquiry: https://cgweb.co.za/project-enquiry.html

This document is for preliminary research. Verify specifications against current standards, product documentation and project requirements.

© 2026 CGWEB NETWORK INFRASTRUCTURE - All rights reserved