Removal of the waterproof cover for the distribution box

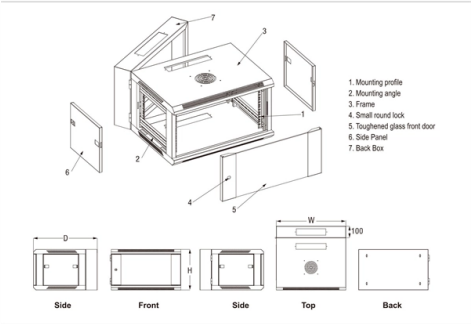

Overview

Some covers are designed to be lifted, while others are designed to be removed by unscrewing them. Removing the weather-resistant plastic cover from an outdoor electrical outlet is often necessary for maintenance, such as replacing a worn gasket or upgrading to a modern “in-use” cover. These exterior enclosures are designed to protect the receptacle from moisture and debris, meaning they are. Here is a step-by-step guide on how to waterproof an outdoor electrical box: Waterproof distribution box manufacturers tell you that the way to waterproof an outdoor distribution box is to first choose a distribution box made of waterproof material, seal the cable entry points, apply silicone. The outdoor weatherproof box electrical control panel, which has been in use for a long time, should be regularly inspected and maintained for waterproofing. If the sealing strips on outdoor electrical junction box or the waterproof rings on outdoor electrical junction box are found to be aged or. However, with a few simple steps, you can open an outdoor electrical box safely and efficiently.

© 2026 CGWEB NETWORK INFRASTRUCTURE - All rights reserved

Article Content

How to Remove a Plastic Cover From an Outdoor Outlet

Safely remove stubborn outdoor outlet covers. Includes essential power-off steps and techniques for rusted screws and stuck seals.

Waterproof distribution box manufacturer tells you, How do you ...

Waterproofing of outdoor electrical boxes is critical to protecting electrical components from moisture and ensuring safety. Here is a step-by-step guide on how to waterproof an outdoor

Regular Maintenance Of Waterproof Distribution Boxes

If the sealing strips on outdoor electrical junction box or the waterproof rings on outdoor electrical junction box are found to be aged or damaged, they should be promptly replaced.

How To Open Electrical Box Outside

By following these steps, you can open an outdoor electrical box without putting yourself or your property in danger. Make sure to double check the box for any signs of damage or corrosion

How To Replace Exterior Outlet Box

This DIY tutorial teaches how to install an outdoor electrical box, GFCI-protected, and weather-proof, flush with the building exterior. The process involves installing a waterproof gasket

Waterproof Distribution Box Installation Guide 2026

A 10 MW floating PV array in Taihu Lake (2022) replaced 40% of distribution boxes after two years because the contractor used 304 fasteners; salt spray penetrated the oxide layer and

Upgrade And Weatherproof Outlet Cover Tutorial : 10 ...

Let me show you how to remove an old electrical cover and then upgrade to a much better version. This is a deep "gang box" cover that allows thicker cords to be plugged in and waterproof...

Waterproof Distribution Box | IP65 Plastic DIN Rail Enclosure –

Our waterproof distribution box solutions adapt across industries. From rooftops to coastal sites, each IP65 waterproof distribution box is engineered for demanding applications.

© 2026 CGWEB NETWORK INFRASTRUCTURE - All rights reserved

How to Open Outdoor Outlet Covers (Steps & Tips)

If your cover is screwed in, you need a screwdriver to remove the screws. If your cover is designed to be lifted, look for a small indentation or gap on the cover.

Guide to Replacing an Outdoor GFCI Outlet | Family

This receptacle outlet is not flush with the building finish surface; it is not GFCI-protected, and there is no weather-proof cover. On the pages below,

2 Way Breaker Box, IP65 Waterproof DIN Rail

About this item IP65 Waterproof: Our 2 din rail distribution protection box and 2 way breaker box shell are made of ABS materials. Our steel din rail box and din rail

smseace Distribution Protection Box, ABS Plastic Transparent Cover ...

Product name: Distribution protection box (design of 5 ways circuit breakers) Material: The shell is made of ABS plastic, the cover is made of transparent PC, the sealing ring is made of silicon rubber, and the guide rail is made of tin plate. Waterproof rating: IP65; Size: 160mmx120mmx95mm Application: Wide range

MAKERELE 4 Way Outdoor Circuit Breaker Box Power IP66 PC/ABS Waterproof ...

The Outdoor Breaker Box Distribution Protection Box is a high-quality and durable option for safeguarding your electrical equipment outdoors. This distribution box is made to accommodate

IP65 ABS Transparent Cover Electrical Box, 5 Way Waterproof

5 Way IP65 ABS Transparent Cover Electrical Box, Waterproof Distribution Protection Box for Circuit Breaker, ABS Power Supply Electronic Junction Box on The Wall Product

FERCAISH IP65 ABS Transparent Cover Electrical Box, 5 Way Waterproof ...

Distribution Protection Box : Our distribution protection box is suitable for 5-way circuit breakers, electrical and electronic control equipment. Provide protection for your switch. Product design : The

9 Way Outdoor Breaker Box IP65 ABS Plastic Din Rail

Product Details About This Product Upgrade your outdoor power setup with this 9-Way Outdoor Breaker Box, featuring IP65 waterproof protection and a durable

The installation requirements for the distribution box

Learn how to install a distribution box safely and correctly. Covers wiring, placement, standards, and expert tips for a compliant setup.

© 2026 CGWEB NETWORK INFRASTRUCTURE - All rights reserved

Waterproof distribution box manufacturer tells you, How do you ...

Waterproof distribution box manufacturer tells you that the method to waterproof the outdoor distribution box is to choose a distribution box made of waterproof materials, seal the cable

Contact Us

Continue your research online:

Website: https://cgweb.co.za
Technical inquiry: https://cgweb.co.za/project-enquiry.html

This document is for preliminary research. Verify specifications against current standards, product documentation and project requirements.

© 2026 CGWEB NETWORK INFRASTRUCTURE - All rights reserved