Saudi Arabia High Voltage Busbar Manufacturing

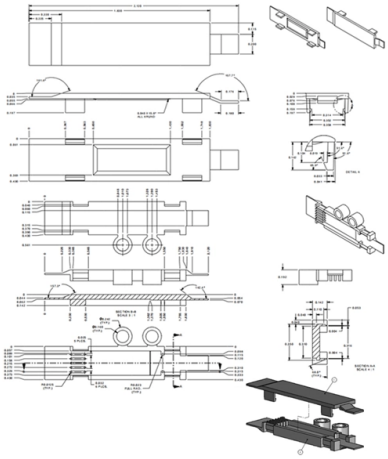

Overview

Bahra Electric focuses on its business growth, taking its exports to mega-scale industrial and construction projects outside the kingdom of Saudi Arabia.

Key Takeaways

Saudi Arabia hosts several specialized manufacturers and fabricators of high voltage busbars, offering custom solutions for industrial, commercial, and infrastructure applications.

Leading Manufacturers and Fabricators

Electric House and Bahra Electric provide high-quality copper busbars with excellent conductivity (up to 99. 99% purity), suitable for high-performance electrical systems.

CAP France BA

T specializes in medium and high voltage systems, including MV & LV switchgear and power distribution networks, offering design, installation, and maintenance services for critical infrastructure. United Electrical Supplies Factory Co. manufactures robust outdoor bus bar chambers rated IP65, ideal for high-demand applications, ensuring safety and efficient power delivery. Power Center Factory focuses on low and medium voltage switchgear with specialized busbar designs up to 7000 A and 690 V, supporting efficient electrical distribution.

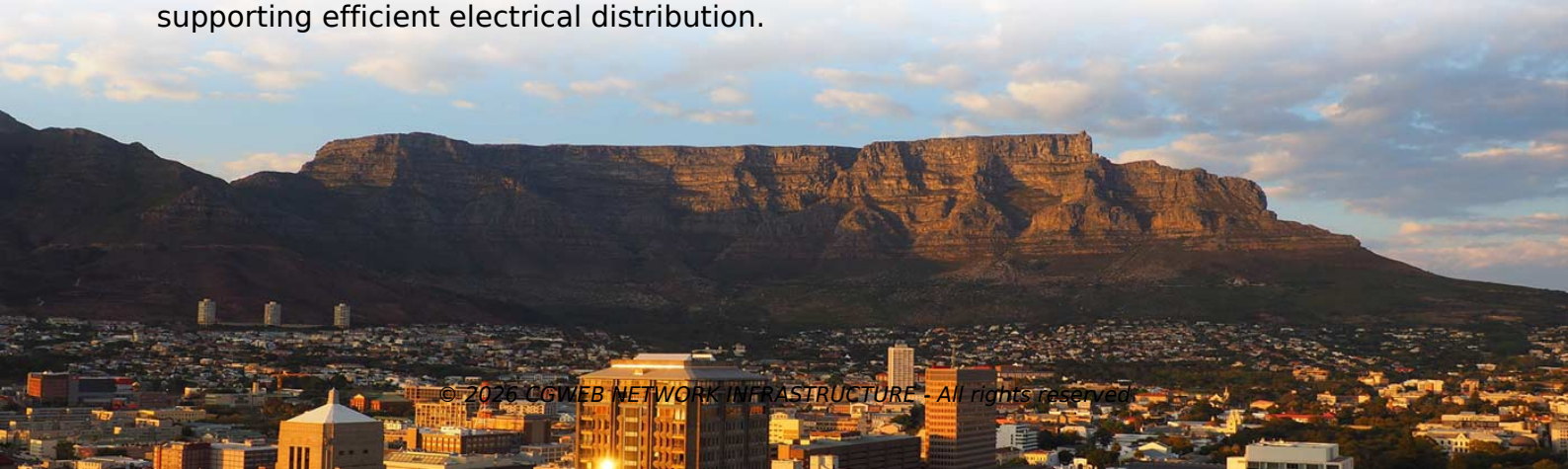

© 2026 CGWEB NETWORK INFRASTRUCTURE - All rights reserved

IPU S

A offers custom busbar fabrication for LV and MV applications, producing precision-cut copper or aluminum bars tailored to project-specific load, thermal, and spacing requirements, with rigorous testing for conductivity and strength. Kesher Automation manufactures electrical busbar panels for industrial, commercial, and infrastructure projects, providing durable, safe, and easily maintainable solutions with international safety compliance. Swanco – AlOjaimi Industry is another notable supplier, offering insulated busbars and wires with a strong presence in both domestic and international markets.

Key Features and Capabilities

Materials: High-purity copper and aluminum for optimal conductivity and durability. Voltage Ratings: Medium and high voltage applications, including switchgear and distribution panels. Customization: Fabrication tailored to load, thermal, and spatial requirements.

Standards Compliance: Products meet international safety and performance standards. Applications: Industrial plants, data centers, commercial complexes, water treatment facilities, and renewable energy projects.

Conclusion

Saudi Arabia's busbar manufacturing sector offers a wide range of high-quality, customizable solutions for high voltage applications. Companies like Bahra Electric, IPU SA, Kesher Automation, and United Electrical Supplies Factory Co. provide reliable, tested, and efficient busbar systems suitable for critical infrastructure, industrial, and commercial projects.

Article Content

Top 19 Busbar Manufacturers in Saudi Arabia (2026) | ensun

Staying informed about these factors will provide a comprehensive understanding of the industry and aid in making informed decisions when exploring potential partnerships or investments in Saudi Arabia''s

Busbar Fabrication – Industrial Power Units for Industry, LLC | Saudi ...

Whether for switchgear, distribution panels, or control systems, our in-house fabrication team ensures each busbar is shaped, sized, and treated to meet project-specific load, thermal, and spacing

BAHRA ELECTRIC

© 2026 CGWEB NETWORK INFRASTRUCTURE - All rights reserved

Bahra Electric focuses on its business growth, taking its exports to mega-scale industrial and construction projects outside the kingdom of Saudi Arabia. Bahra Electric boasts a diverse team with

Cabling Middle East | Wiring Harness & Busbar Manufacturer

From concept to commissioning, we design, develop, and manufacture wiring harnesses, control panels, busbars, and advanced assemblies that meet the highest international and Saudi standards.

Copper Busbars & Rods

Bahra Electric produces high conductivity copper busbars and rods using: BE sources this copper from international LME registered companies. The facility for

Swanco – AlOjaimi Industry

A renowned supplier of busbars and insulated wires in the electrical power distribution sector. With a rich history dating back to our establishment in 2012, we take pride in our unique track record of serving

Manufacturer of Electrical Busbar Panel in Saudi Arabia | Advanced ...

Every Electrical Busbar Panel goes through strict quality testing and meets international safety and performance standards. Kesher Automation also provides customized solutions to meet specific

Power Distribution and Switchgear – Industrial Power Units for

Precision-cut copper and aluminum busbars manufactured in-house to meet current flow, thermal rating, and space constraint requirements. While not manufactured by IPU SA, we source and supply high

Al Inshrah Busbar Trading

Our clients can avail from us copper busbars, bare or tin plated, which are used for various electrical applications. These busbars are free from oxygen and are

Suzhou Kiande Electric to Showcase Full Busbar & Switchgear

Suzhou Kiande Electric Co., Ltd., a specialized R&D and manufacturing enterprise focusing on intelligent automation equipment for electrical busbar and switchgear production, formally

BAHRA ELECTRIC

Bahra Electric signed an agreement with Prysmian to manufacture OPGW... Bahra Electric signed an agreement with Prysmian to manufacture OPGW optical

Power Electronics Components & Systems Market (2025-2035)

© 2026 CGWEB NETWORK INFRASTRUCTURE - All rights reserved

Saudi Arabia, UAE, and South Africa are the primary markets. Saudi Arabia''s Vision 2030 renewable energy programme targets 130 GW of solar and wind capacity by 2030, generating string

User | wapakdailynews

Suzhou Kiande Electric Co., Ltd., a specialized R&D and manufacturing enterprise focusing on intelligent automation equipment for electrical busbar and switchgear production, formally

Global Busbar Systems Market Size, Industry Growth & Forecast

The busbar systems market value chain begins with the procurement of raw materials such as copper, aluminum, and insulating materials, which are fundamental to manufacturing high

Global Hybrid Battery Busbar Market Research Report 2026 (Status

The widespread adoption of high-voltage platforms (800V and above) imposes stringent requirements on the busbar''s lightweight design, integrated sensing functions, and thermal

Busbar Trunking Market Size, Growth & Share Report 2031

Busbar Trunking Market Size & Share Analysis - Growth Trends and Forecast (2026 - 2031) The Busbar Trunking System Market Report is Segmented by Conductor Material (Copper,

Global Copper and Copper Alloy Busbars Market Size, Share, Industry ...

Enables predictive maintenance of manufacturing equipment. Facilitates integration of smart features into busbar products for added value. Copper and Copper Alloy Busbars Market

Full text of "NEW"

Full text of "NEW" See other formats Word . the, > < br to of and a : " in you that i it he is was for - with) on (? his as this ; be at but not have had from will are they -- ! all by if him one your

© 2026 CGWEB NETWORK INFRASTRUCTURE - All rights reserved

Contact Us

Continue your research online:

Website: https://cgweb.co.za
Technical inquiry: https://cgweb.co.za/project-enquiry.html

This document is for preliminary research. Verify specifications against current standards, product documentation and project requirements.

© 2026 CGWEB NETWORK INFRASTRUCTURE - All rights reserved